# MES: Week 1 Assignment

Luke Pepin | 1/29/2026 | ISE 573: Manufacturing Execution Systems

**Part 1: System Overview**
1.1 Selected Manufacturing System: Expeditionary Automated Repair Cell (EARC)
1.2 Product(s) Produced: High-tolerance metal replacement components (e.g., valve stems, actuator housings, drone chassis parts). These are manufactured via CNC milling or additive manufacturing with robotic material tending.
1.3 Typical Customers: Forward-deployed Naval units (e.g., Submarine tenders, Marine Corps Logistics Groups) operating in remote or logistics-constrained environments.
1.4 Scale of Operations: Low-Volume / High-Mix. The system operates as a Job Shop designed for rapid tool switching to produce unique parts based on immediate critical repair needs.

**Part 2: Manufacturing Process Classification**

2.1 Process Type: Discrete. The system produces distinct, countable items (individual repair parts) rather than continuous formulations.
2.2 Production Strategy: Make-to-Order (MTO). Due to limited inventory space in expeditionary units, parts are only produced when a specific maintenance work order is received.
2.3 Layout Type: Cellular. All equipment (CNC, Robot, Controller) is clustered locally to ensure low-latency communication and autonomous operation within the cell.
2.4 Volume vs. Variety: High Variety / Low Volume. This places the system in the lower-left quadrant of the Product-Process Matrix, prioritizing flexibility (the ability to make any part) over throughput (speed of production).

**Part 3: Process Flow Description**

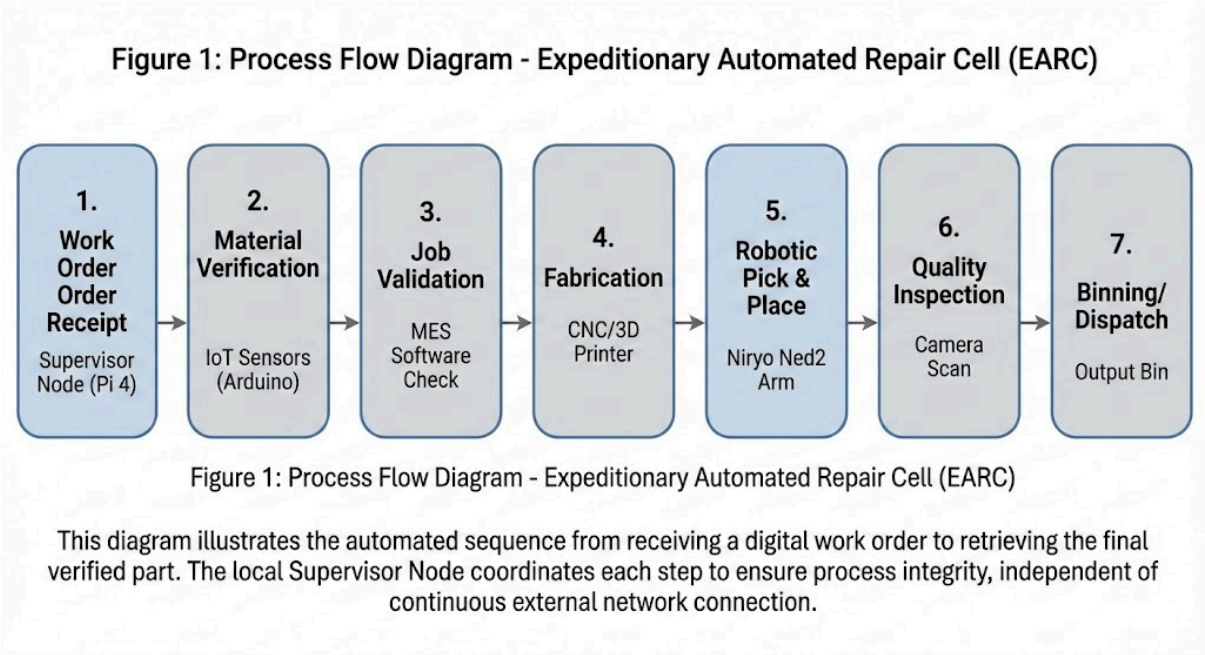

**3.2 Major Process Steps (4-8 steps):**

| Step | Process Stage Name | Description |
|---|---|---|
| 1 | Work Order Receipt | The local Supervisor Node (Raspberry Pi 4) receives a digital work package containing the CAD file and G-code. |
| 2 | Material Verification | The system verifies available raw material (filament/stock) using IoT weight sensors (Arduino Nano BLE). |
| 3 | Job Validation | The MES verifies the G-code file is complete and safe to run before enabling machine power (replacing the manual "safety check"). |
| 4 | Fabrication | The CNC machine or 3D printer executes the validated G-code to produce the part. |
| 5 | Robotic Pick & Place | The Niryo Ned2 robot retrieves the finished part from the build plate. |
| 6 | Visual Quality Inspection | A camera scans the part's dimensions to verify they match the original digital parameters. |
| 7 | Binning/Dispatch | The robot places the verified part into the output bin for human retrieval. |

**3.2 Material Flow Summary:** Materials move from raw stock storage to the fabrication bed via manual loading or gravity feed, then to the inspection station and output bin via the Niryo Ned2 robotic arm.

**Part 4: MES Functional Requirements (ISA-95)**

4.1 Dispatching Production Units: Unlike traditional MES that streams commands from a central server, this system's Supervisor Node (Raspberry Pi 4) must dispatch G-code locally. The MES is responsible for buffering the job instructions so the machine can continue operating even if the external network connection is lost.

4.2 Data Collection and Acquisition: The MES collects real-time status data from the machinery (spindle speed, temperature) and the environment. Because the system runs on open hardware (Arduino/Raspberry Pi), the MES must also validate that the data is coming from the correct sensors and hasn't been corrupted by noise or interference.

4.3 Product Tracking and Genealogy: The system must create a digital log for every machined part. This digital thread records exactly which G-code file was used to make the part. This ensures that a replacement valve used on a submarine matches the original design specifications exactly.

4.4 Maintenance Management: Instead of scheduled maintenance (which is difficult in the field), the MES uses condition-based monitoring. It tracks motor current and vibration via the Supervisor Node. If readings deviate from a baseline healthy state, the MES alerts the operator that repairs are needed before the machine breaks down.

4.5 Quality Management: The MES compares real-time feedback from the robot against a Digital Twin simulation. If the physical robot's position drifts too far from the simulation (indicating a potential collision or error), the MES flags the part as a reject and halts the process to prevent damage.

**Part 5: Key Challenges**

5.1 Network Reliability & Continuity: Standard MES platforms often rely on constant server connections. In an expeditionary environment, the network may drop unexpectedly. The challenge is ensuring the local hardware has enough autonomy to finish the current job without crashing or stopping mid-cut if the internet goes down.

5.2 Data Integrity: Because G-code controls dangerous machinery, ensuring the file is correct is critical. The challenge is preventing errors where a file might be corrupted during transmission (e.g., a Z-axis depth change). The MES must verify the file matches the original engineering design before the spindle starts turning.

5.3 Hardware Resource Constraints: Running an MES on edge devices like a Raspberry Pi creates a performance bottleneck. The challenge is balancing the computational load—performing data collection, verification, and machine control simultaneously without causing system lag that could ruin the part.